Ercolina® Non-Mandrel Tooling Order Form

Quote:_____

Company Name: _____ Contact: _____ Date: _____

Address: _____

City: _____ State: _____ Zip: _____

Telephone:_____ Fax: _____ Email: _____

Distributor Name:_____ Contact: _____

Material Specifications:

Round Tube/Pipe Dimensions: _____ OD_____ ID

Square/Rect. Tube/Pipe Dim.:_____ OD_____ ID

Wall Thickness: _____

Material Type/Grade:_____

Weld Seam: _____ Yes _____ No

No. Parts Per Day:_____ No. Bends Per Part: _____

Prints Supplied: _____ Yes _____ No

Are Mill Certs Available _____ Yes _____ No

Centerline Radius (CLR): _____

Min. Dist. Bet. Bends (G): _____

Outside Diameter (OD):_____

Maximum Degree of Bend: _____

Center Former

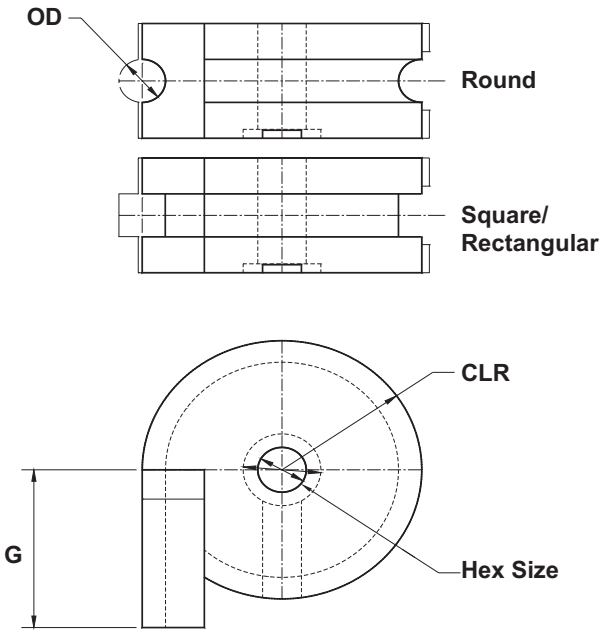

Machine and Tooling Recommendations:_____

_____

_____

_____

_____

_____

_____

_____

_____

Bend Terminology

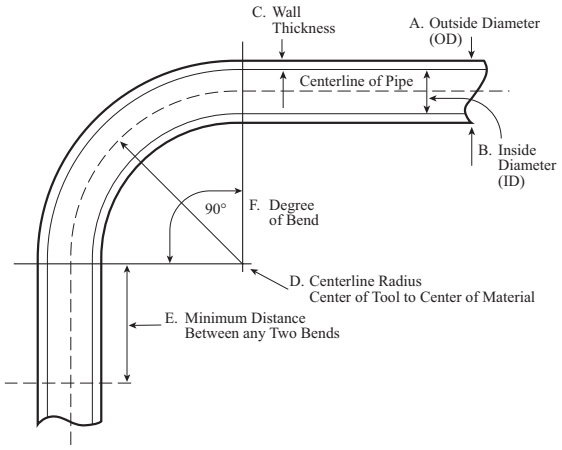

I have reviewed the above information for accuracy and confirm it is correct. Any alterations made from original information will result in additional cost and may extend delivery time.

_____ Customer Signature

_____ Date

3100 Research Parkway, Davenport, IA 52806 • Telephone 563-391-7700 • Fax 563-391-7710 • Email info@ercolina-usa.com • www.ercolina-usa.com